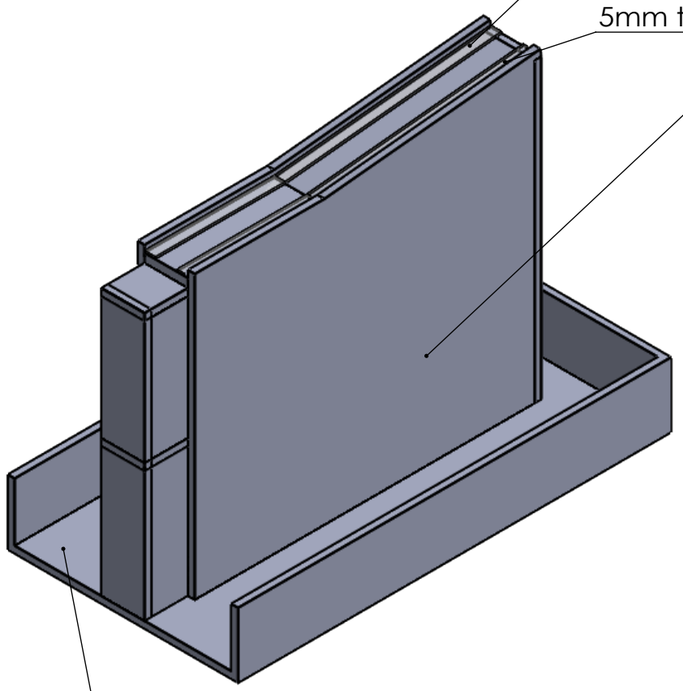

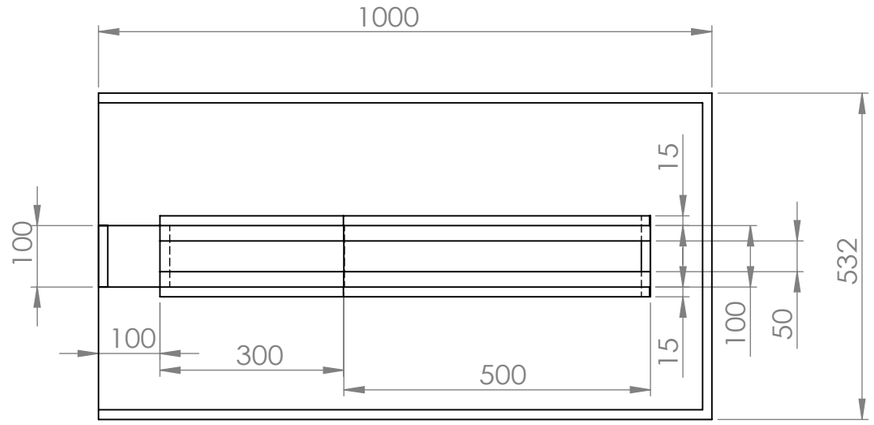

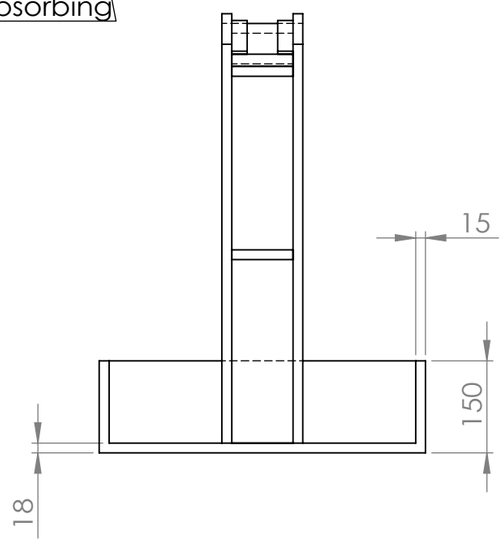

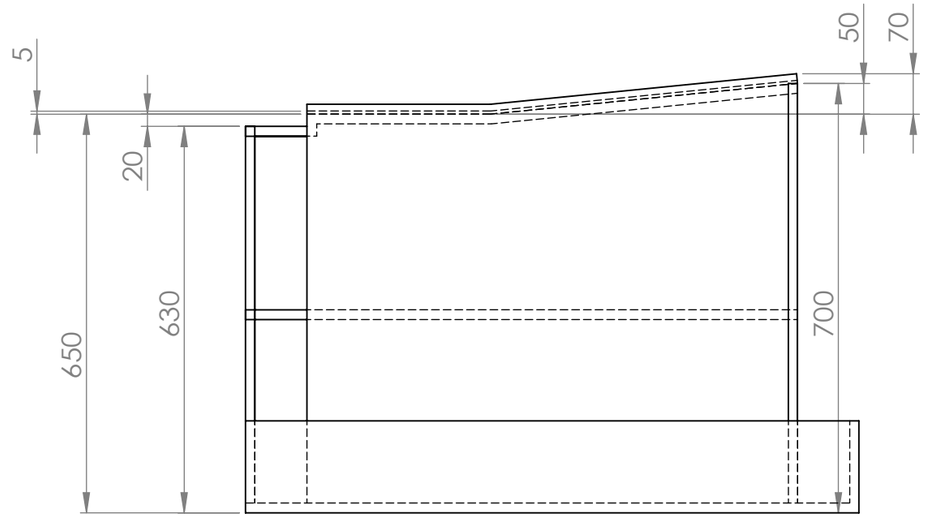

UNLESS OTHERWISE SPECIFIED: DIMENSIONS ARE IN MILLIMETERS SURFACE FINISH: TOLERANCES: LINEAR: ANGULAR:	FINISH:	DEBURR AND BREAK SHARP EDGES	DO NOT SCALE DRAWING		NAME	SIGNATURE	DATE
				DRAWN			
				CHK'D			
				APPV'D			
				MFG			
				Q.A			
				WEIGHT:		SCALE:1:20	

REVISION

MATERIAL:

TITLE:

DWG NO.

Part A

A3

SHEET 1 OF 1